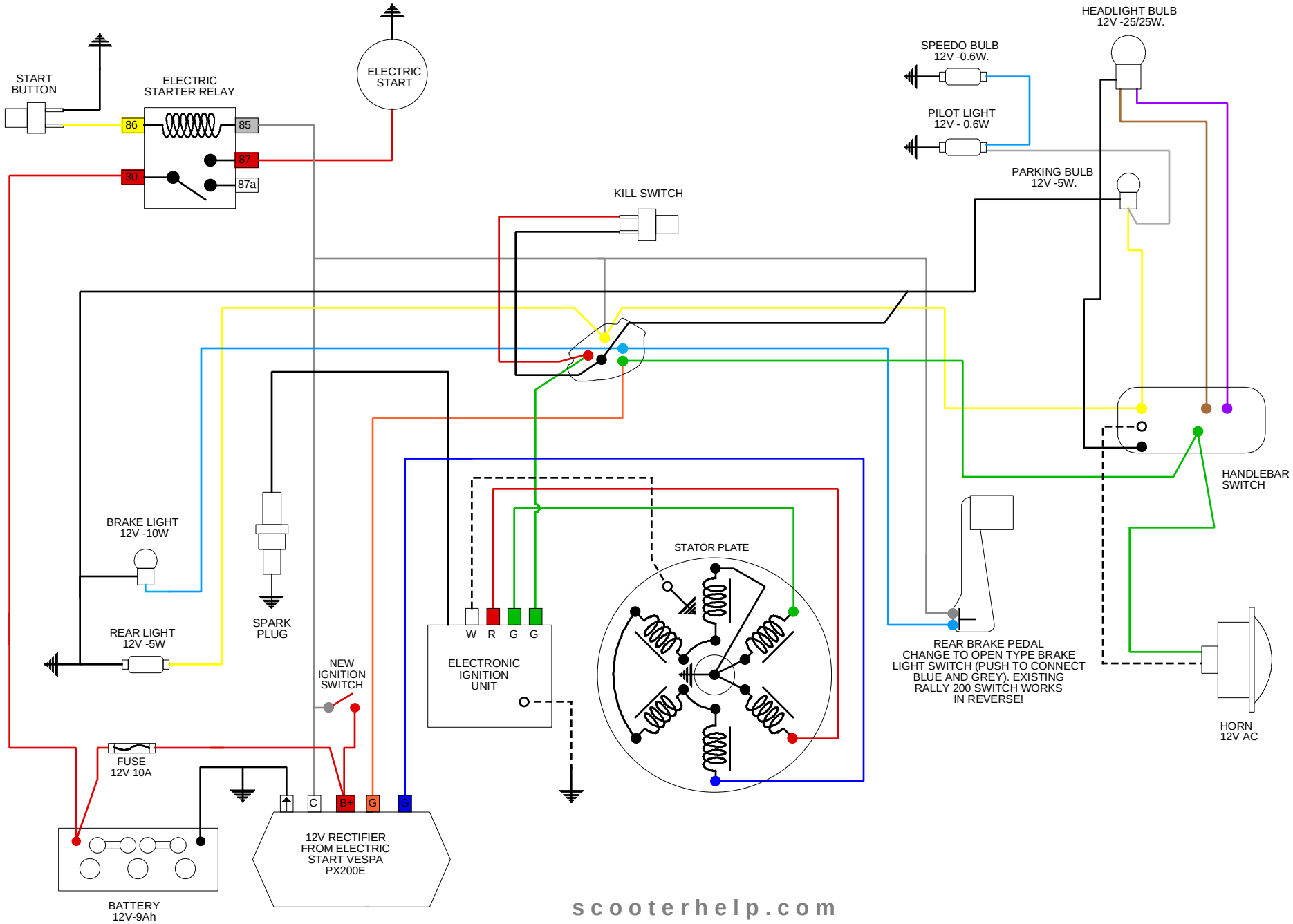

scooterhelp.com

VESPA RALLY 200 (VSE1T) w/out battery or key
PX200E ELECTRIC START CONVERSION

------ (WHITE)